External Assessment
NCFE Level 2 Certificate in Engineering Studies (601/4532/8)
Unit 02 Introduction to engineering drawing (L/506/3766)
Paper number: P000426
Assessment window: **Sample Paper (This is not a live paper)**

Task 3

Complete your details below:

Centre name		**Centre number**	
Learner name		**Learner number**	

Learner declaration:
I confirm that the work contained in this external assessment is all my own work.
I have not copied work from anyone else.
I have not copied work directly from handouts/internet/textbooks or any other publication.
If I have used a quote, then I have referenced this appropriately.
My full name above is my registered name with NCFE.

Learner signature: ***Sample*** **Date:** ***Sample***

Time allowed – 2 hours

Examiner use only

AC	Grade
1.3	
2.1	
2.2	
2.3	
2.4	

Instructions for learners

- Read Task 3 carefully and make sure that you understand what you need to do to complete Task 3 Part A and Part B.
- You **MUST** attempt **all** of the questions in Task 3 to address all assessment criteria. You cannot achieve a Pass grade unless you meet the required standard in all of the questions.
- Write your responses to the questions in the spaces provided. If you need more space you may use extra paper.
- If you are using a word processor, you **must** make sure that all of your work is printed out.
- Make sure that any printouts or extra paper is securely attached to this assessment paper and labelled clearly with:
  - your name and learner number
  - centre name and centre number
  - task and question number
- Your 3D drawing completed for Task 3 may be hand-drawn or produced using a computer. If you produce your drawings on a computer you **must** print out a hard copy. You **must** submit the hard copy only.
- At the end of the assessment hand all documents over to your Invigilator.

You are **not** allowed to use the internet during this external assessment.

Please turn over for the list of equipment that you will need.

All the material in this publication is copyright ©NCFE.

This page is intentionally left blank

This is a list of the equipment you will need for this external assessment.

Essential:

- 2H and 4H pencils
- A3/A4 plain paper
- ruler
- set square/T-square
- compass
- protractor
- eraser.

Optional (this list is not exhaustive):

- drawing board
- clutch pencil
- templates
- French curves
- CAD software
- additional H-type pencils.

DO NOT TURN OVER UNTIL YOU ARE INSTRUCTED TO DO SO BY THE INVIGILATOR.

This page is intentionally left blank

Scenario

You work for Massey-Brown Tractors and you are part of a team that are developing a miniature tractor for small gardens.

The hand-drawn sketch you have been given is shown below.

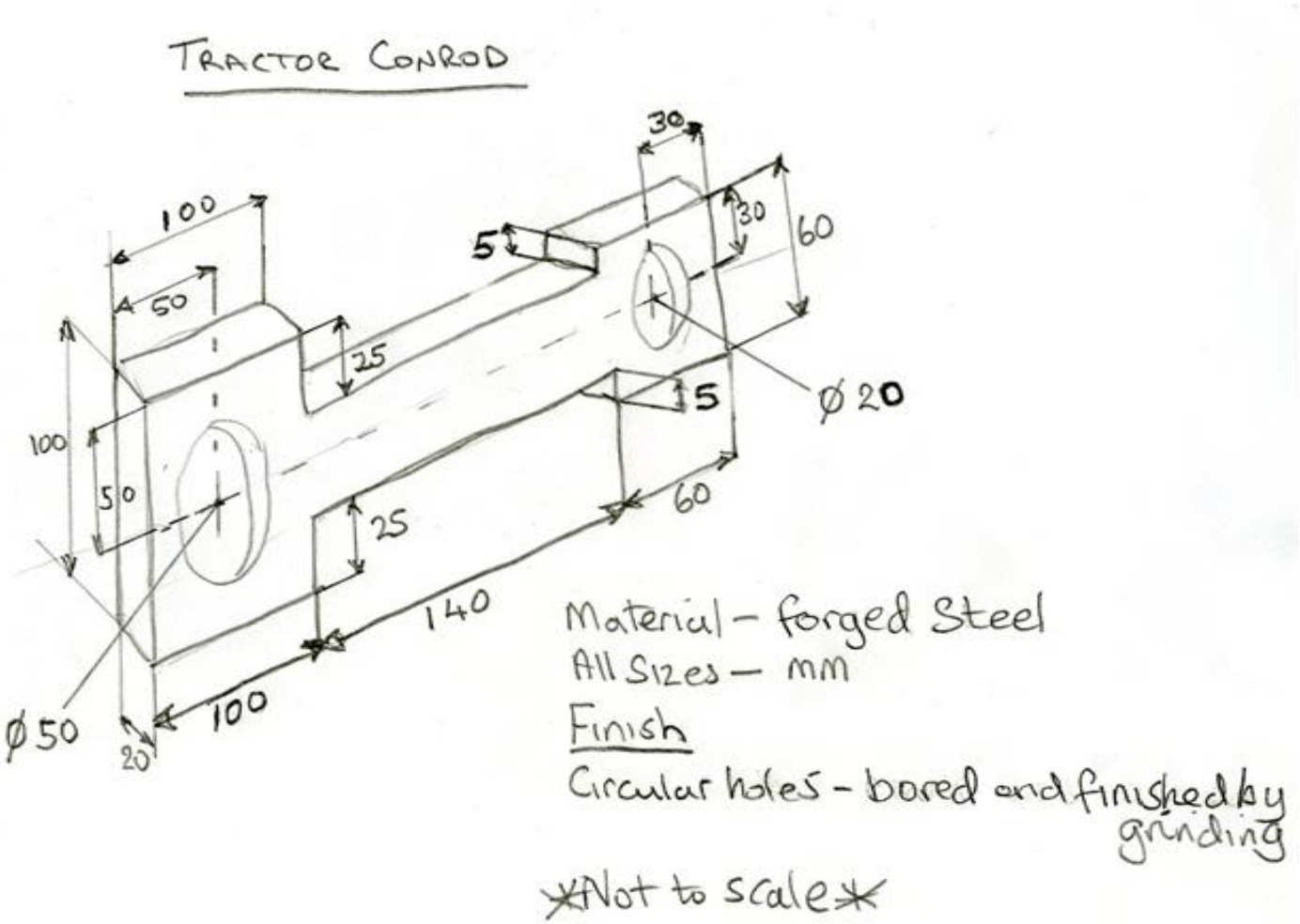

Task 3

For Task 3 there are two parts: **Part A** and **Part B**.

You must ensure that your work in Task 3 addresses assessment criteria 1.3, 2.1, 2.2, 2.3 and 2.4. *You can refer to the assessment criteria at the end of the paper.*

Part A

Look at the sketch on page 5.

Your task is to produce a **3D** drawing which will be used to make the tractor conrod.

As you plan your drawing, answer the following questions.

1. What is the name of the method of **3D** drawing that you will use? Explain why you are going to use this method of drawing.

……

……

……

……

……

……

2. What other type of **3D** drawing could you use? State the reasons why you might use an alternative method of **3D** drawing.

……

……

……

……

……

……

3. Comment on the difference between scale and proportion of the two drawings Truck A and Truck B below.

Truck A

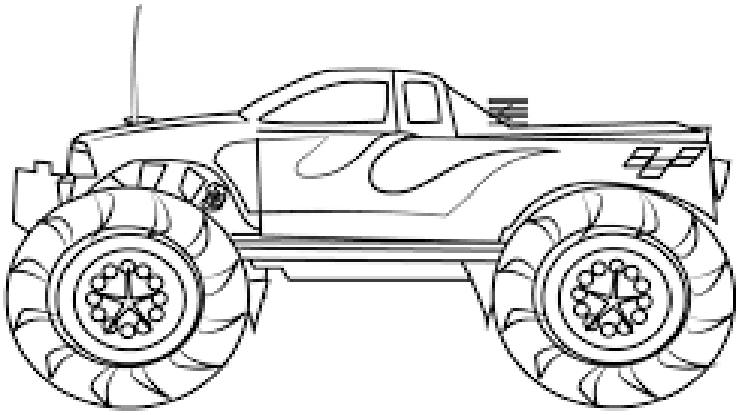

Truck B

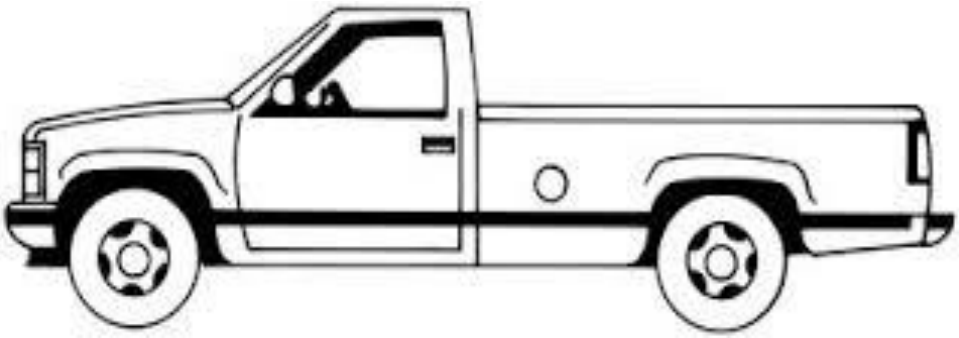

Scale:

……

……

……

Proportion:

……

……

……

Part B

Now produce your **3D** drawing.

Use the sketch on page 5.

The drawing **must** be:

- **3D**
- correctly laid out on A4 or A3 paper
- drawn to scale. You should choose the scale you think is most appropriate
- drawn using appropriate drawing tools and equipment. You can decide whether to draw by hand or use a computer.

If you are using CAD, you **must** provide evidence to show the process involved in the production of your drawing by demonstrating which tools you have used to create the various aspects of the drawing. Evidence could be print screens.

If you produce your drawing on a computer it **must** be printed out and only submitted as a **hard copy.**

Assessment criteria and grade descriptors.

The assessment criteria 1.3, 2.1, 2.2, 2.3 and 2.4 are detailed below. If you are aiming for a Merit or Distinction it is particularly important that you are familiar with what these grades require, as you work through the tasks.

Assessment criteria	Pass	Merit	Distinction
1.3 Describe the purpose of scale and proportion in engineering drawing	Learners will describe the purpose of scale and proportion in engineering drawing	Learners will coherently describe the purpose of scale and proportion in engineering drawing	Learners will describe the purpose of scale and proportion in engineering drawing showing critical judgement
2.1 Demonstrate the correct layout of a design sheet for 2D and 3D engineering drawings	Learners will demonstrate the correct layout of a basic design sheet for 2D and 3D engineering drawings	Learners will demonstrate the correct layout of a detailed design sheet for 2D and 3D engineering drawings	Learners will skilfully demonstrate the correct layout of a sophisticated design sheet for 2D and 3D engineering drawings
2.2 Apply appropriate scales to all drawings	Learners will apply appropriate scales to all drawings	Learners will apply appropriate and realistic scales to all drawings	Learners will skilfully apply appropriate and realistic scales to all drawings
2.3 Demonstrate the accurate use of drawing tools and equipment	Learners will demonstrate the accurate use of drawing tools and equipment	Learners will demonstrate the accurate use of drawing tools and equipment showing experimentation	Learners will skilfully demonstrate the accurate use of drawing tools and equipment showing experimentation
2.4 Present their final 2D and 3D engineering drawings showing evidence of the process involved in its production	Learners will present their final 2D and 3D engineering drawings showing evidence of the process involved in its production	Learners will present their final 2D and 3D engineering drawings showing evidence of the process involved in its production, justifying their choices	Learners will present their final 2D and 3D engineering drawings showing evidence of the process involved in its production showing critical judgement

What you need to hand in after your external assessment.

At the end of the timed external assessment you will hand in the following work to your Invigilator:

- this external assessment paper
- any extra paper you have used, securely attached
- your **3D** drawing
- any printouts.

Make sure that:

- any extra paper is clearly identified with your:
    - name
    - learner number
    - centre name
    - centre number
- you have signed the learner declaration on the front page of this external assessment paper.

Any remaining time can be spent checking your responses to Task 3.

This is the end of the external assessment.